Ekspanzijske posode Zilmet HYDRO PRO

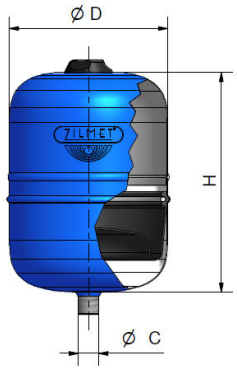

2-35 l

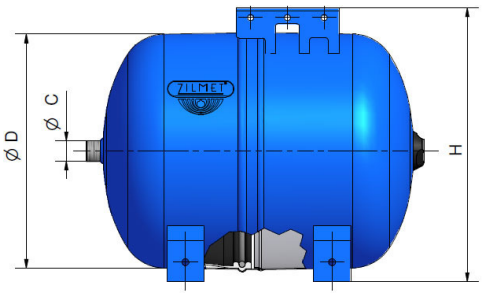

24-50 l

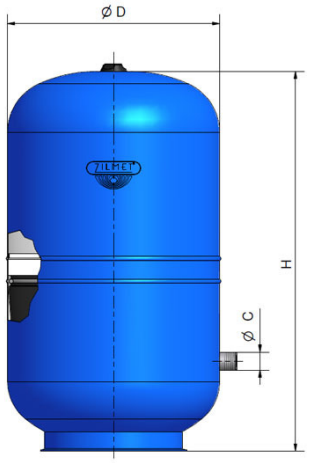

50-600 l

Model	Prostornina	Diameter	Višina	E	Priključek
HYDRO PRO 0,5	0,5 L			-	1/2''
HYDRO PRO 1	1 L			-	1/2''
HYDRO PRO 2	2 L	142	196	-	1/2''
HYDRO PRO 5	5 L	160	270	-	1/2''
HYDRO PRO 8	8 L	200	280	-	1/2''
HYDRO PRO 12	12 L	270	264	-	3/4''
HYDRO PRO 18	18 L	270	349	-	3/4''
HYDRO PRO 24	24 L	300	392	-	1''
HYDRO PRO 35	35 L	380	370	-	1''
HYDRO PRO 50	50 L	380	418	-	1''
HYDRO PRO 80	80 L	450	608	150	1''
HYDRO PRO 105	105 L	500	665	156	5/4''
HYDRO PRO 150	150 L	500	897	216	5/4''
HYDRO PRO 200	200 L	600	812	225	5/4''
HYDRO PRO 250	250 L	630	957	245	5/4''
HYDRO PRO 300	300 L	630	1105	245	5/4''
HYDRO PRO 400	400 L	630	1450	245	5/4''
HYDRO PRO 500	500 L	750	1340	290	5/4''
HYDRO PRO 600	600 L	750	1555	290	5/4''0

LONTECH
OGREVALNA TEHNIKA
NOMENJ 13, 4264 BOHINJSKA BISTRICA
www.lontech.si
info@lontech.si
031303988